Used On	Scale	Title	Drawing Number
5590/1	2:1	Circular vial 15.5mm dia, sens 35'/2mm	3055/1

Issue	Amendment	Date

Note:

Sensitivity : 35'/2mm bubble movement
Centre Ring : ø8.3mm ±0.1 external diameter
Colour : Black
Line Thickness : 0.3mm
Bubble : ø5.3 ±0.25 @20°C

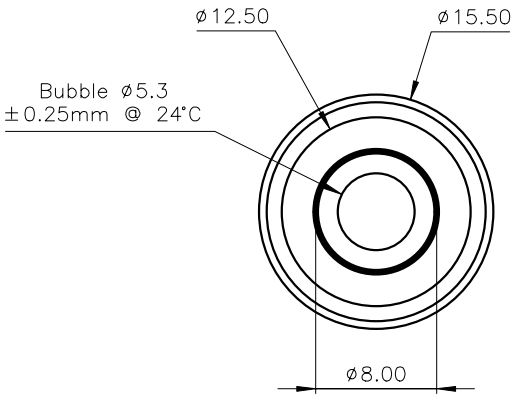

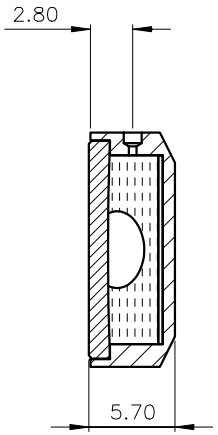

Third Angle Projection

Finish	Tolerances Unless Stated Otherwise (mm units)	Material	Drawn By	Date	Level Developments Ltd
Black anodised	XX. ±1.0 XX.X ±0.25 XX.XX ±0.1	Aluminium housing, glass disc	JHL	29/07/2004	Croydon, Surrey, CR0 2DN t.+44 (0)20 8684 1400