Used On	Scale	Title	Drawing Number
BI-45	1:1	Ball inclinometer, ± 45°	3300/1

Issue	Amendment	Date

ø3.2 Black Ceramic Ball
Operational Temperature range: −20 to 70°C
Storage Temperature range: −40 to 82°C
Engraving: 0.5mm wide filled white
Backing: Yellow

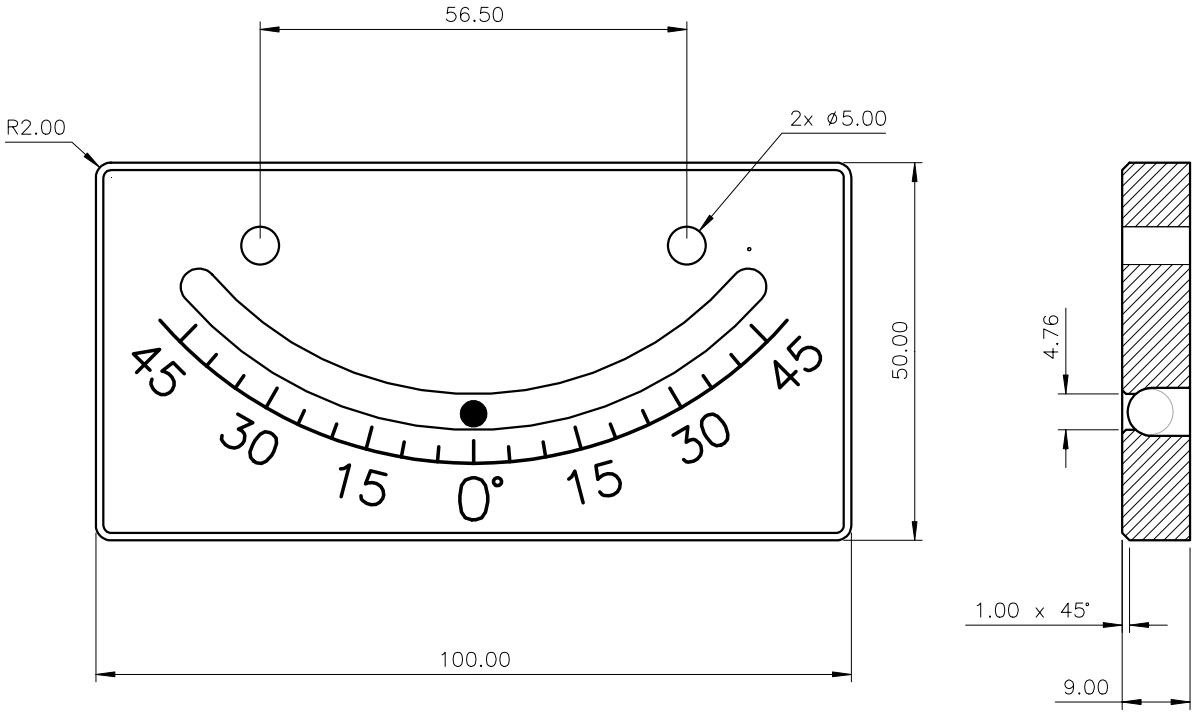

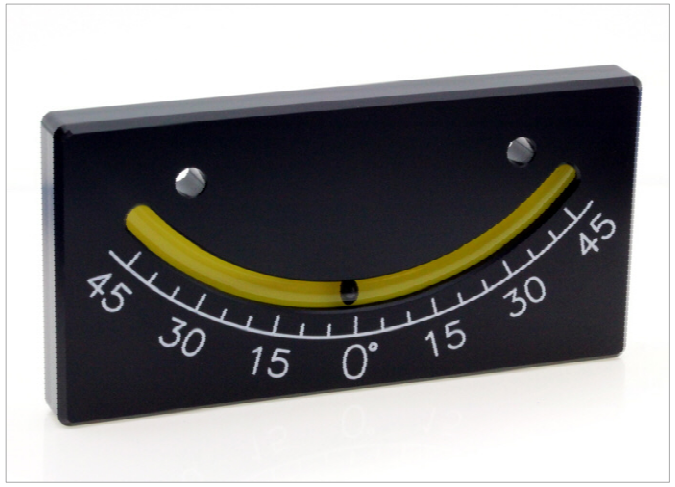

Third Angle Projection

Finish	Tolerances Unless Stated Otherwise (mm Units)	Material	Drawn By	Date	Level Developments Ltd
Black Anodised	XX. +/− 1.0 XX.X +/− 0.25 XX.XX +/− 0.1	Alumnium Housing, glass tube	JHL	27/06/2012	Croydon, Surrey, CR0 2DN t.+44 (0)20 8684 1400