Used On	Scale	Title	Drawing Number
5508/101	3:1	Sensor vial, 18x8mm, sensitivity 1.5mm/m	3750/101

Issue	Amendment	Date

Specifications:

- Barrel grinding, R=1375mm
- Polished finish
- Sensitivity 5' ±1' per 2mm bubble movement

Filling:
- Liquid n-Heptane (min 99.9% purity)
- Airbell 9.0±0.3mm @ 20°C

Finish:
- Outside Glass surface to be free from scratches
- No finger prints
- No internal or external dust particles

Packaging:
- Antistatic tape and reel, 500pcs per reel

Inspection:
- 100% automated vision inspection for vial length, bubble size and hysteresis.

Performance:
- Resolution <1 arc second
- Hysteresis <10 arc seconds
- Operating temperature range −20°C to 70°C
- Storage temperature range −40°C to 80°C

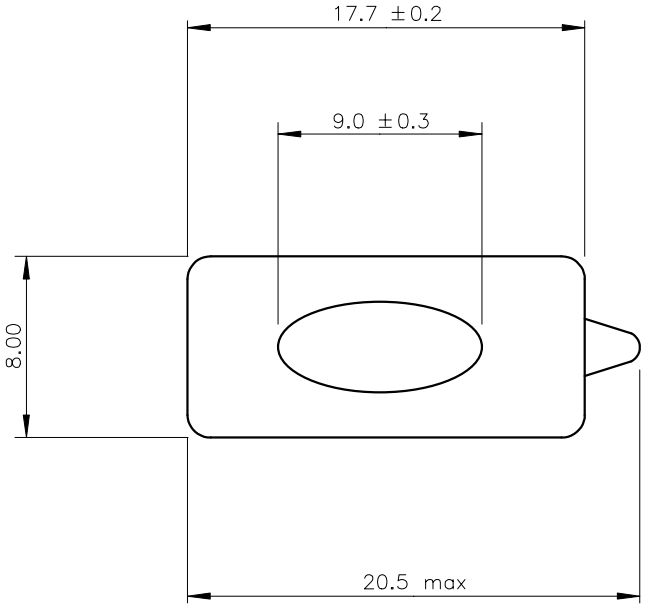

Third Angle Projection

Finish	Tolerances Unless Stated Otherwise (mm units)	XX. ±1.0 XX.X ±0.25 XX.XX ±0.1	Material: Soda glass tube, 8mm diameter Drawn By: JHL Date: 26/03/2009	Level Developments Ltd Croydon, Surrey, CR0 2DN t.+44 (0)20 8684 1400